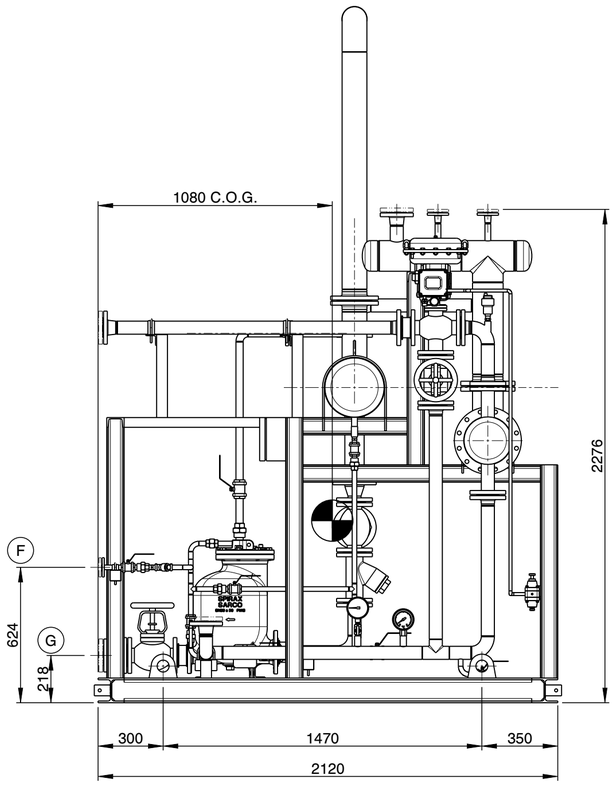


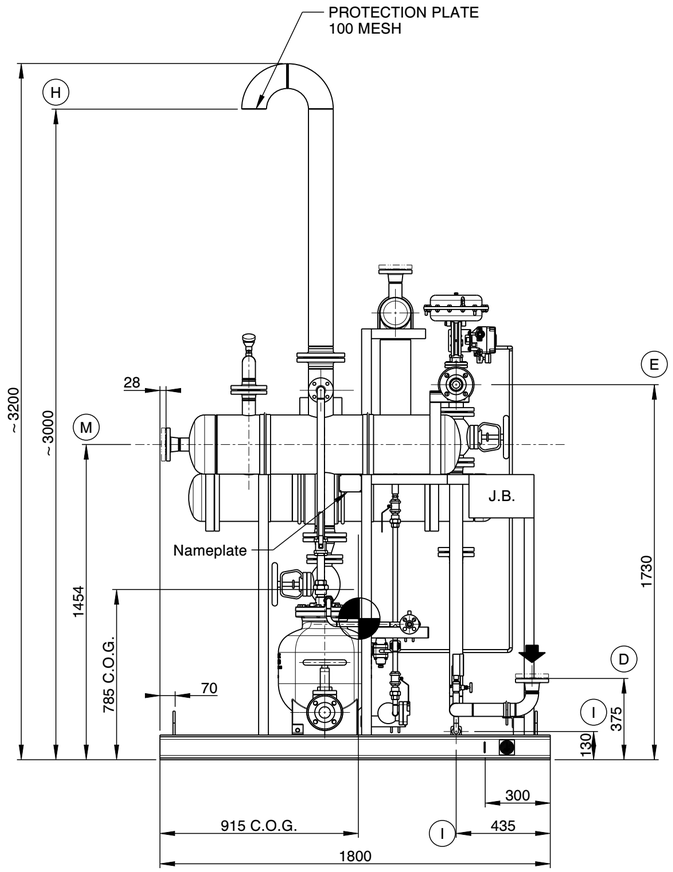


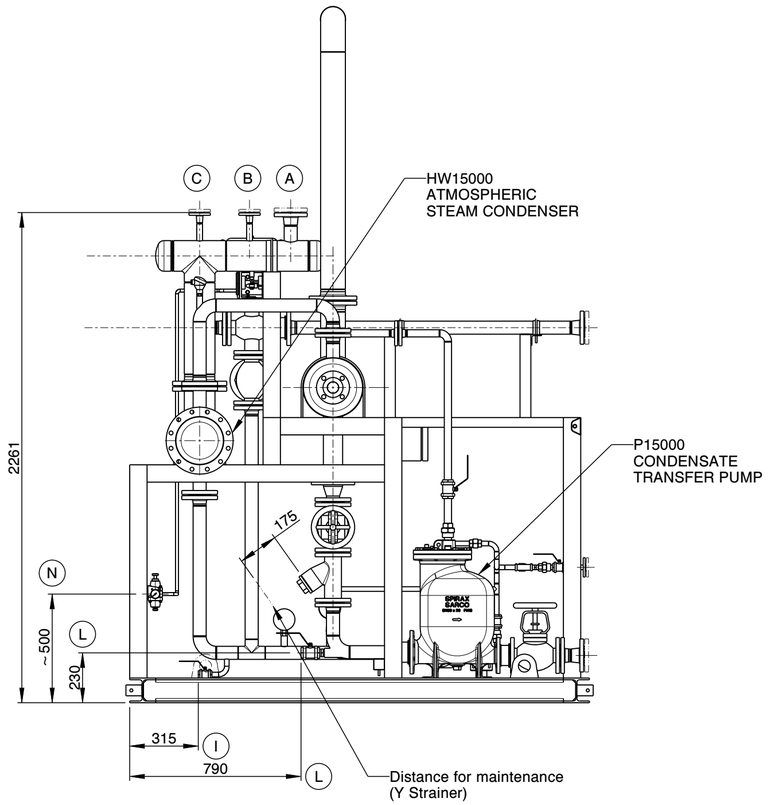


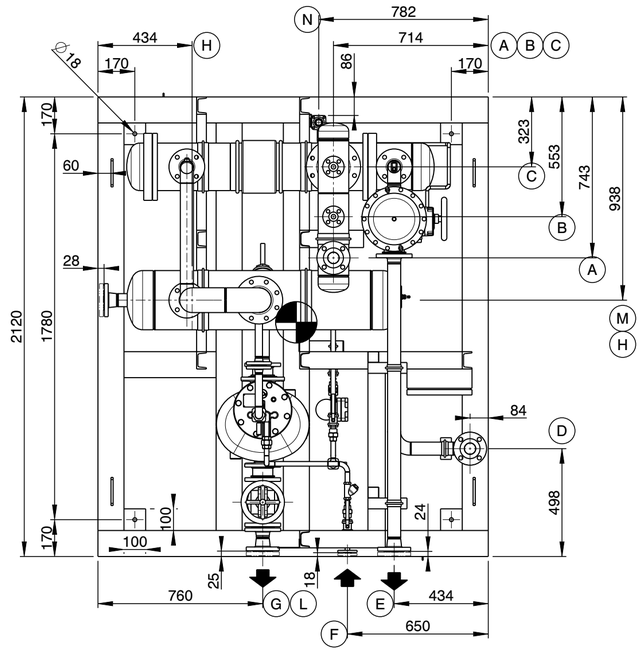


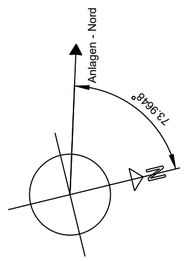


TOTAL OPERATING WEIGHT = ~1120 kg

TOTAL EMPTY WEIGHT = ~978 kg

| RELATED DOCUMENTS | |
|---|---|
| P & ID | PKG-134537 |

| Pos. | Description | ∅ | TYPE |
|---|---|---|---|
| A | CONDENSATE INLET | 2" | W.N. - 150 RF |
| B | CONDENSATE INLET | 3/4" | W.N. - 150 RF |
| C | CONDENSATE INLET | 3/4" | W.N. - 150 RF |
| D | WATER INLET | 2" | W.N. - 150 RF |
| E | WATER OUTLET | 2" | W.N. - 150 RF |
| F | MOTIVE STEAM INLET | 1/2" | S.O. - 150 RF |
| G | MFP OUTLET | 2" | W.N. - 150 RF |
| H | VENT | 4" | W.N. - 150 RF |
| I | WATER INLET DRAIN | 1/2" GAS F - 3000# | |
| L | MFP PUMP DRAIN | 1" GAS F - 3000# | |
| M | OVERFLOW | 2" | W.N. - 150 RF |
| N | PNEUMATIC AIR INLET | 1/4" - NPT | |

| Rev. | Descrizione rev. / Rev. Description | Data/Date | Dis./Drafted | Contr./Checked |
|---|---|---|---|---|
| 3 | GENERAL REVISION AFTER CLIENT COMMENTS | 13/11/2023 | RME | FRM |
| 2 | GENERAL REVISION AFTER CLIENT COMMENTS | 09/10/2023 | RME | FRM |
| 1 | ADDED C.O.G. POINT | 27/09/2023 | RME | FRM |
| 0 | ISSUED | 20/09/2023 | RME | FRM |

spirax sarco
Via per Cinisello, 18
20834 Nova Milanese - MB
Tel. +39 0362 4917.1
Fax +39 0362 4917.301
www.spiraxsarco.com/it

| | | | |
|---|---|---|---|
| Cliente / Customer | SIAD MACCHINE IMPIANTI S.p.A | Foglio / Sheet 1 | di / of 2 |
| Titolo / Subject | PREASSEMBLED UNIT OF ATMOSPHERIC STEAM CONDENSER - - - G.A. DRAWING | Scala / Scale 1:20 | Formato / Size A2 |
| N° fabbrica / Serial n° | 23580002298-01 | Anno / Year 2023 | N° Disegno / Drawing n° PKD-134538 |

Tolleranze non indicate secondo UNI EN 22768-1-v / Not displayed tolerances according to UNI EN 22768-1-v

Spirax-Sarco s.r.l. si riserva tutti i diritti su questo documento che non puo' essere riprodotto neppure parzialmente senza la sua autorizzazione scritta.
Spirax-Sarco s.r.l. reserves all rights on this document that can not be reproduced in any part without its written consent.

NOTE:

1- ALL DIMENSIONS ARE IN mm
2- BOLT HOLES MUST STRADDLE THE AXES UNLESS OTHERWISE SPECIFIED