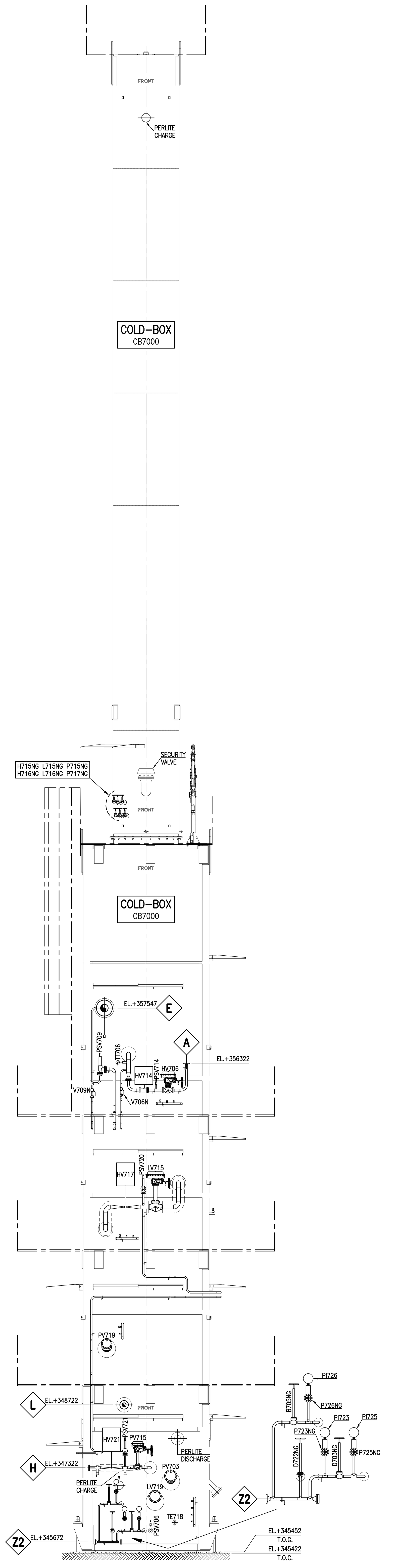

VIEW FROM "F"

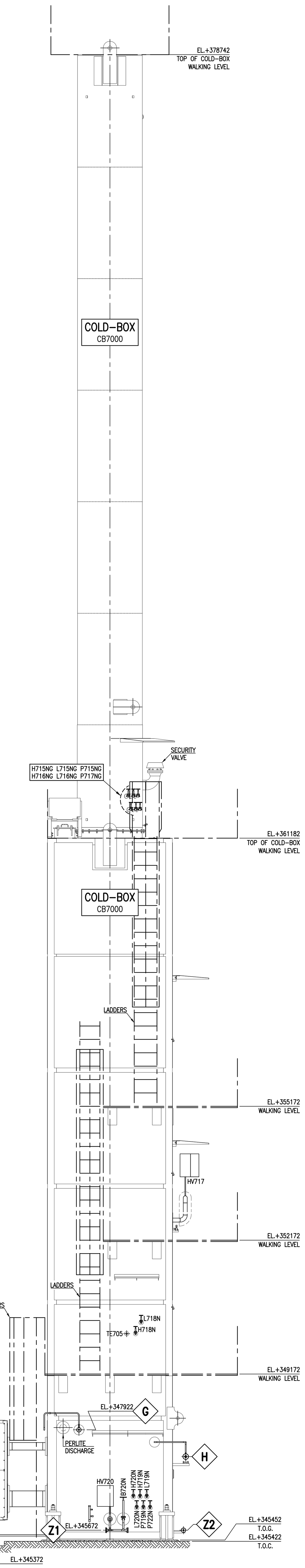

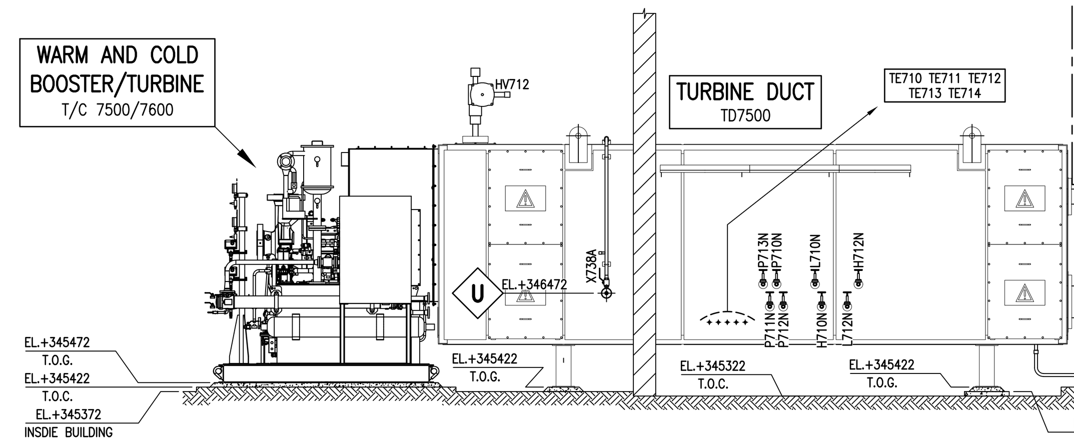

VIEW FROM "E"

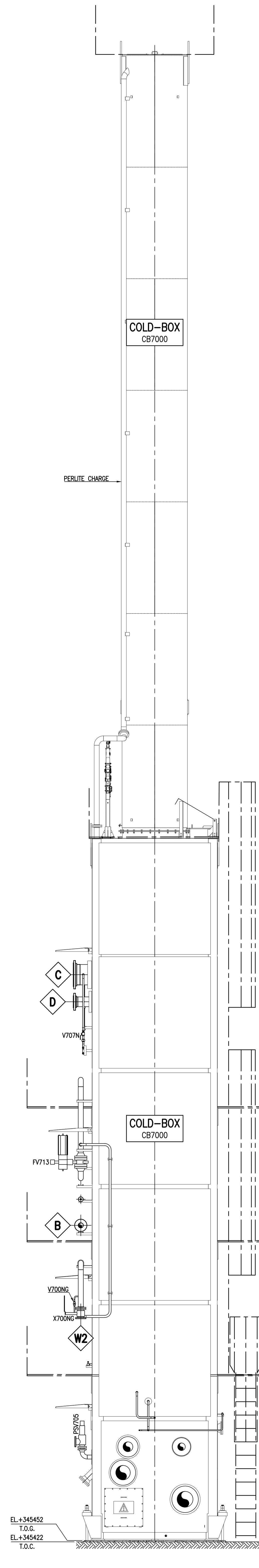

VIEW FROM "D"

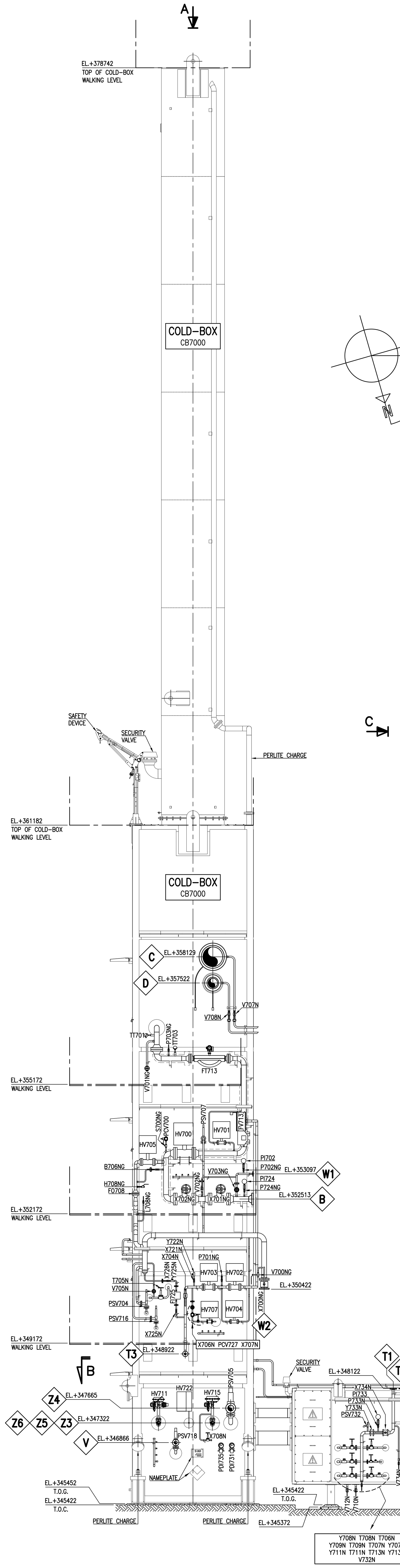

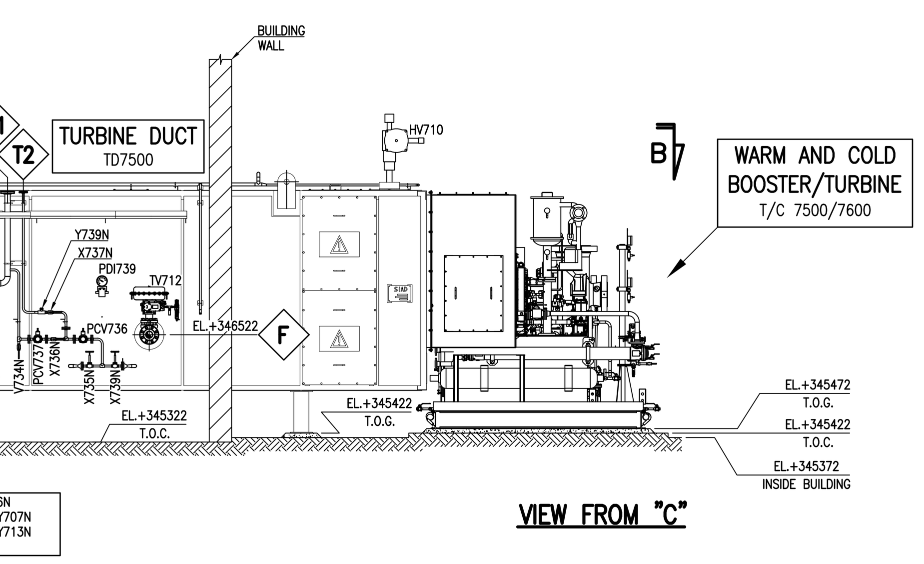

VIEW FROM "C"

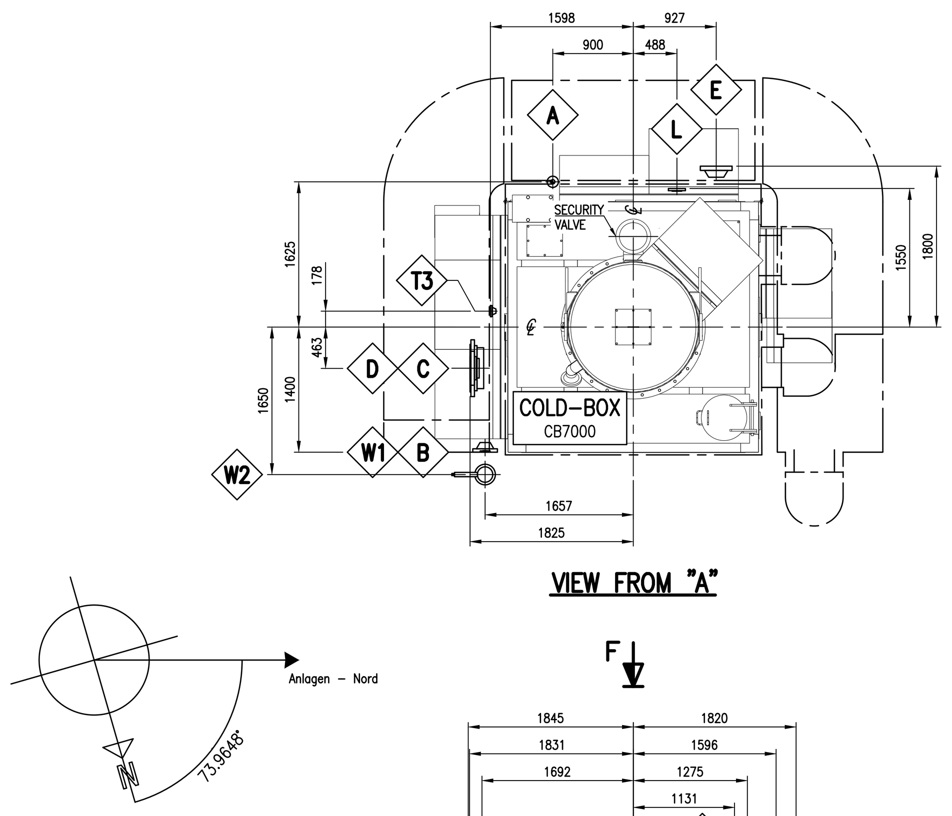

VIEW FROM "A"

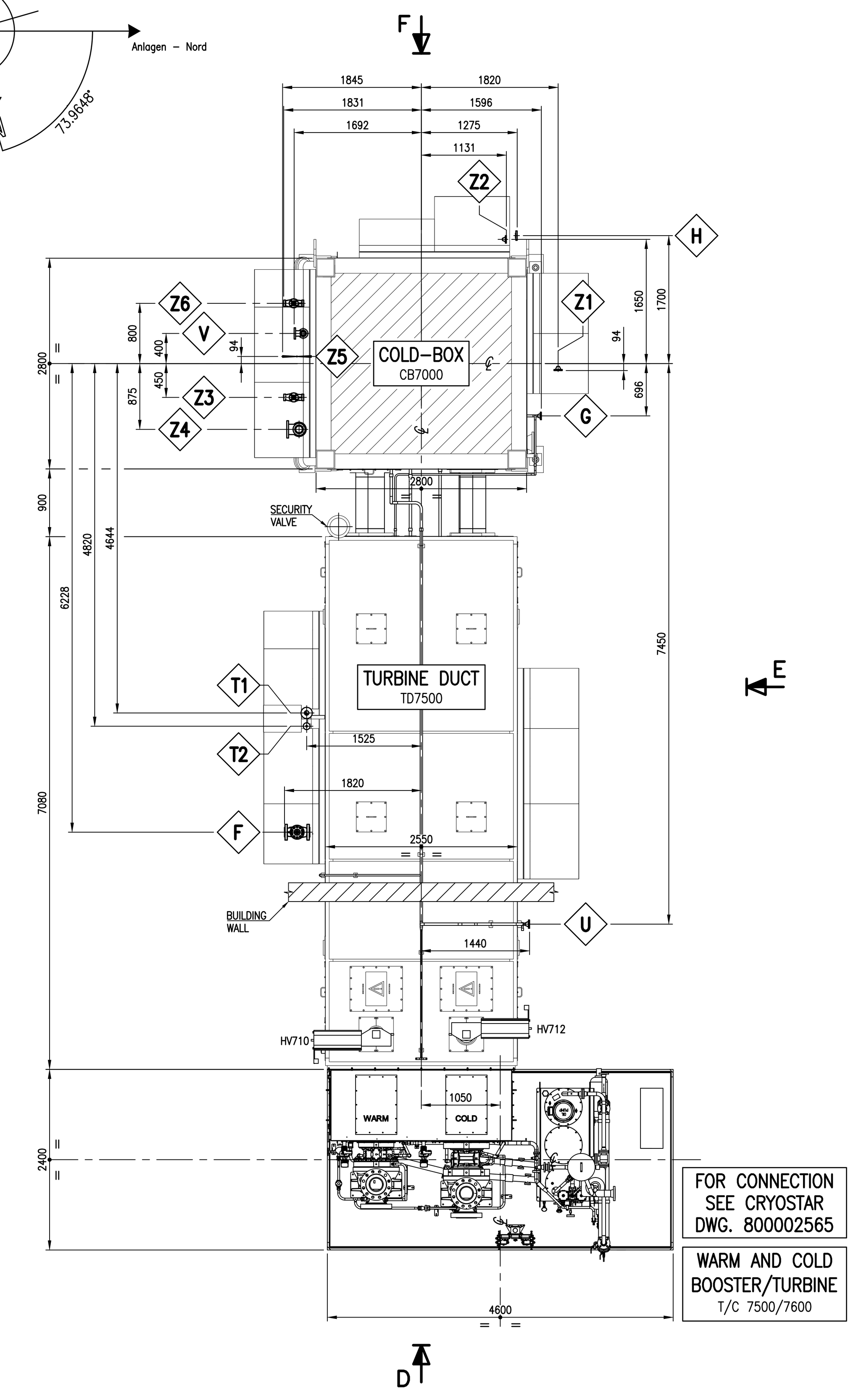

SECTION B-B

CONNECTION LIST			
	DESCRIPTION	LINE NUMBER	CONNECTION
A	TO N2 RECYCLE COMPRESSOR AND COLD VENT COLLECTOR	N-105-1½"-A18-V	FLG. ø1½" 150# R.F.
B	NG INLET	NG-10-4"-C18-F	FLG. ø4" 600# R.F.
C	TO N2 RECYCLE COMPRESSOR FROM TRUBINE	N-102-18"-A30-N	FLG. L.J. ø18" 150#
D	HPN FROM N2 RECYCLE COMPRESSOR	HPN-102-8"-B30-N	FLG. L.J. ø8" 300#
E	HPN FROM BOOSTER	HPN-100-6"-C29H-N	FLG. ø6" 600# R.F.
F	BY-PASS HPN INLET	HPN-101-3"-C29H-N (TV712)	FLG. ø3" 600# R.F.
G	LIN INLET	LIN-100-¾"-A27-F	FLG. ø¾" 150# R.F.
H	FLASHING OUTLET	NG-101-1½"-A29-F	FLG. ø1½" 150# R.F.
L	LNG OUTLET	LNG-103-3"-A27-N	FLG. ø3" 150# R.F.
U	INSTRUMENT AIR INLET	A-04-1"-A18-V	FLG. ø1" 150# R.F.
V	DISCHARGE PSV718	N-107-1½"-A29-N (PSV718)	FLG. ø2" 150# R.F.
T1	THAW GAS INLET	N-33-2"-A18-V	FLG. ø2" 150# R.F.
T2	N2 CASING PURGE INLET	N-105-½"-A18-V	FLG. ø½" 150# R.F.
T3	N2 INLET FROM LIQUFACTOR EMERGENCY AND PSV COLD-BOX DISCHARGE MANIFOLD PURGING	N-23-1½"-A18-V	FLG. 1½" 150# R.F.
W1	TO HOT FLARE	NG-10B-1"-A29-N	FLG. ø1 150# R.F.
W2	TO PSV AND VENT EXHAUST MANIFOLD	NG-21-4"-A29T-N (X700NG)	FLG. ø4" 150# R.F.
Z1	LIN DRAIN	LIN-04-1"-A27-N	FLG. ø1" 150# R.F.
Z2	LNG DRAIN	LNG-102-¾"-A27-N	FLG. ø¾" 150# R.F.
Z3	DISCHARGE HV715	NG-101-3"-A29-N (HV715)	ø2" S.W. (HV715)
Z4	DISCHARGE PSV705	NG-101-3"-A29-N (PSV705)	FLG. ø4" 150# R.F.
Z5	DISCHARGE HV722	LNG-103-½"-A27-N (HV722)	ø½" B.W. (HV722)
Z6	DISCHARGE HV711	LNG-103A-3"-A27-N (HV711)	ø2" S.W. (HV711)

REF. DOCUMENTS

- FOUNDATION LAYOUT WITH LOADS AND TRENCHES
  SEE DWG. I 20833 – 422REZH030001001PLY001

NOTE

1. ALL DIMENSIONS ARE IN MILLIMETERS
2. T.O.G. = TOP OF GROUT – T.O.C. = TOP OF CONCRETE

---	---
---	---
Projektnummer OGE	Maßnahmenbezeichnung OGE

Rev. Nr.	Datum	Beschreibung	erstellt	geprüft	freigegeben	Datum	freigegeben
0A	14.07.2023	ISSUE	GRITTI M.	PERICO R.	ANTONELLI		
			SIAD M.I.			OGE	

Projekt - Nr.		Standort / Projektname
DG-001115	SIAD MACCHINE IMPIANTI	LNG LIQUEFACTION PLANT

	Datum	Name
Erst.	14.07.2023	GRITTI M.
Gepr.	14.07.2023	PERICO R.
Freig.	14.07.2023	ANTONELLI

bioplusLNG

Zeichnungsbenennung
TRUCK LOADING BAY MODULE G.A.
LKW-LADESTELLENMODUL G.

Schutz-vermerk ISO 16016 beachten	Blattgr.	Maßst. 1/		F-Tech	Standortkurzname	A-Art	Anl-Nr	A-Teil	D-Art	Lfd.-Nr	Blatt	Änd
	A0	1:50	OGE	520	REZH	599	001	009	PAN	001	01-	0A

Urspr.: I 20836 Rev.0A | Ers.f.: | Ers.d.:

520REZH599001009PAN00101-0A.dwg